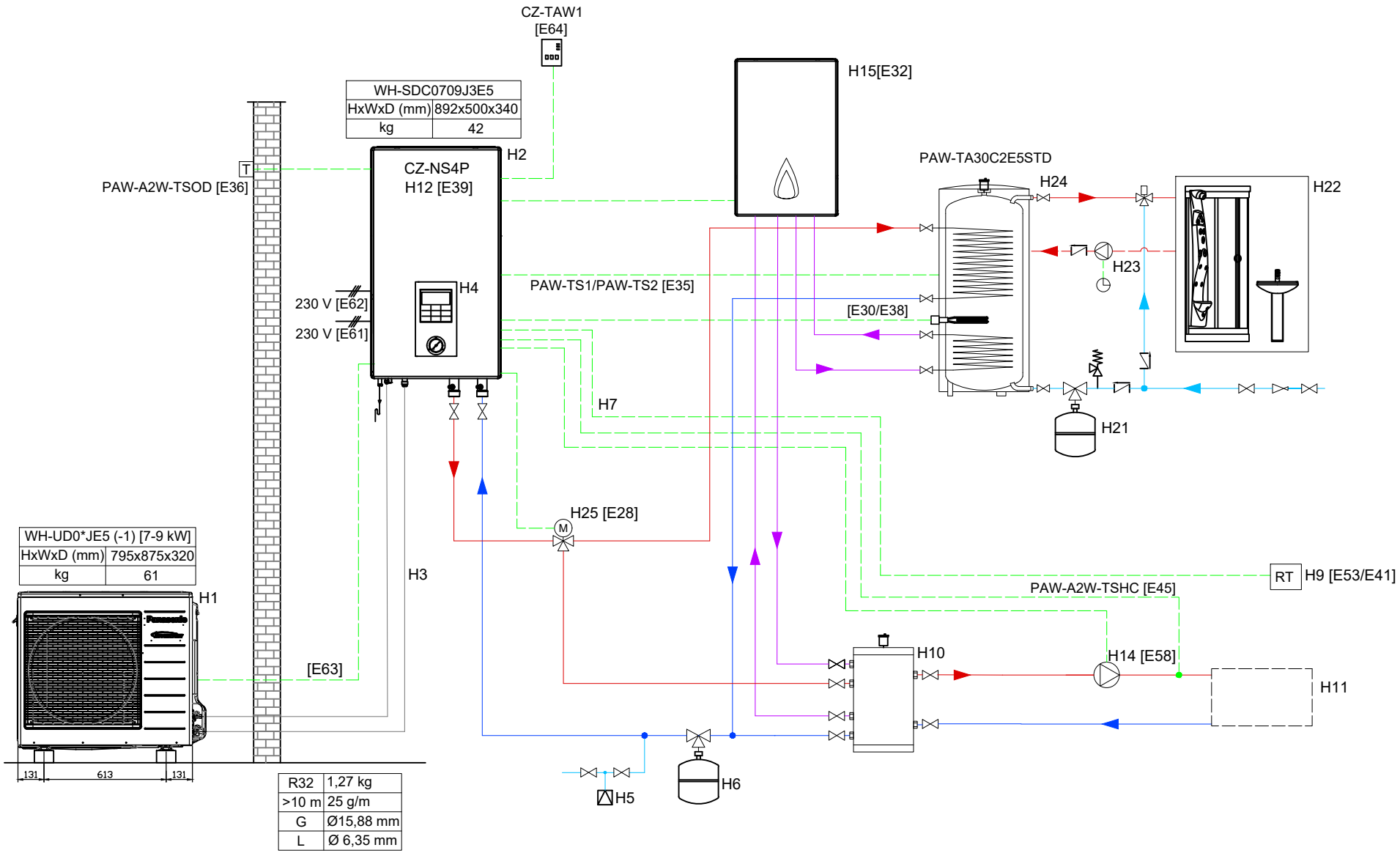

Panasonic 24.02.2020 - V. 2.0

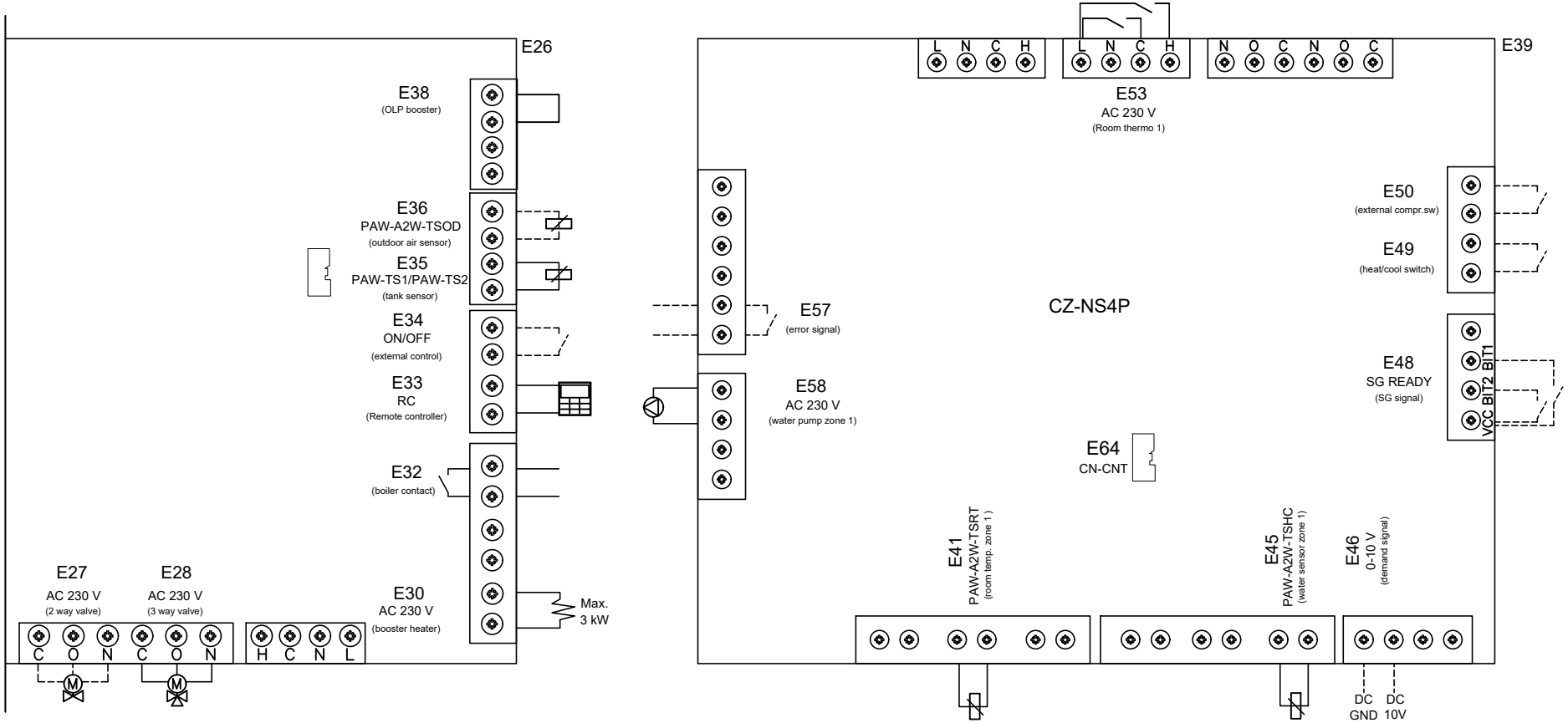
E26
E38
(OLP booster)
E36
PAW-A2W-TSOD
(outdoor air sensor)
E35
PAW-TS1/PAW-TS2
(tank sensor)
E34
ON/OFF
(external control)
E33
RC
(Remote controller)
E32
(boiler contact)
E27
AC 230 V
(2 way valve)
E28
AC 230 V
(3 way valve)
E30
AC 230 V
(booster heater)
Max.
3 kW
C O N C O N
H C N L
E39
L N C H
L N C H
N O C N O C
E53
AC 230 V
(Room thermo 1)
E57
(error signal)
E58
AC 230 V
(water pump zone 1)
CZ-NS4P
E50
(external compr.sw)
E49
(heat/cool switch)
E48
SG READY
(SG signal)
VCC BIT2 BIT1
E64
CN-CNT
E41
PAW-A2W-TSRT
(room temp. zone 1)
E45
PAW-A2W-TSHC
(water sensor zone 1)
E46
0-10 V
(demand signal)
DC GND
DC 10V

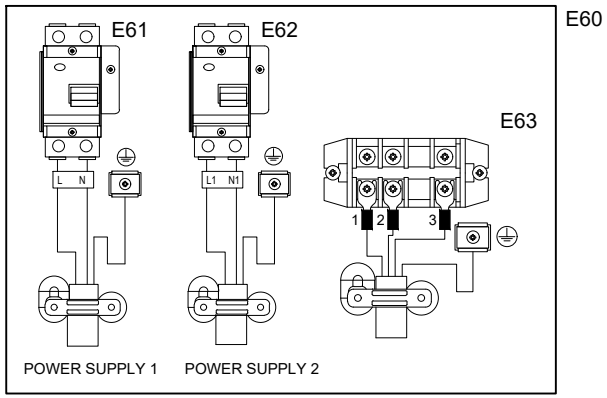
E60
E61
E62
E63
L N
L1 N1
1 2 3
POWER SUPPLY 1
POWER SUPPLY 2